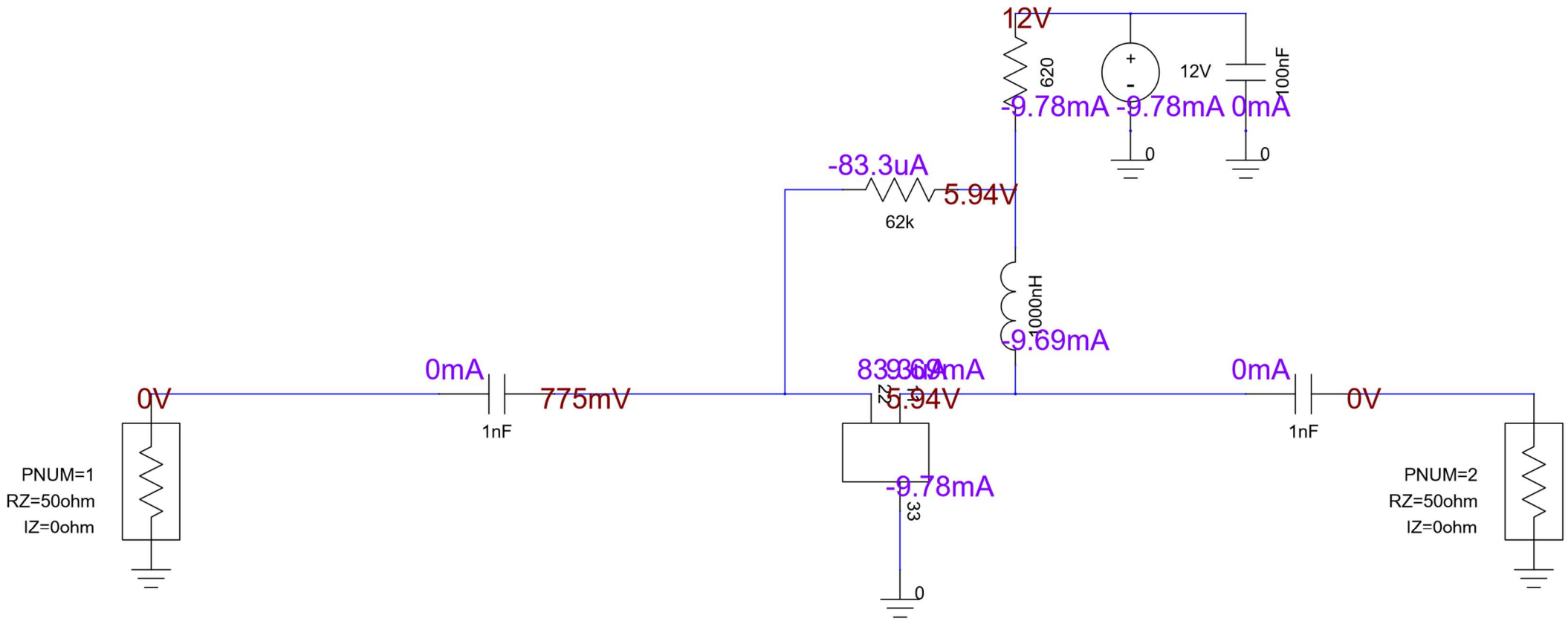
12V
620
12V
100nF
-9.78mA -9.78mA 0mA
0
0
-83.3uA
5.94V
62k
1000nH
-9.69mA
0mA
0mA
0V
775mV
1nF
1nF
0V
-9.78mA
33
0
PNUM=1
RZ=50ohm
IZ=0ohm
PNUM=2
RZ=50ohm
IZ=0ohm

Stability

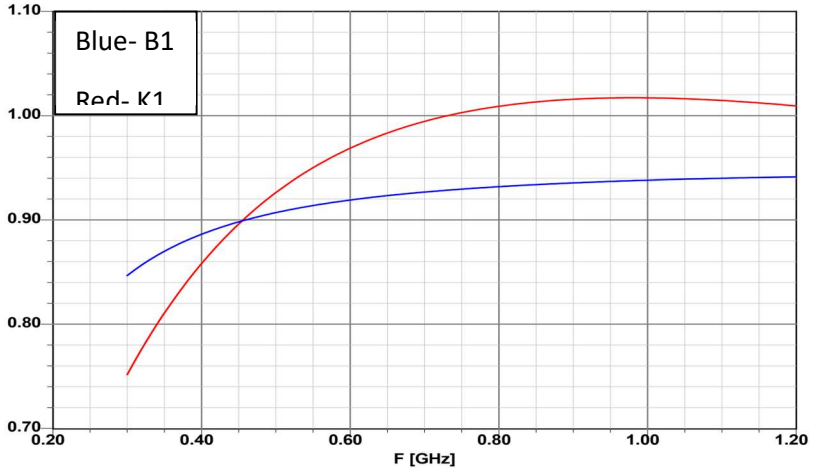

O

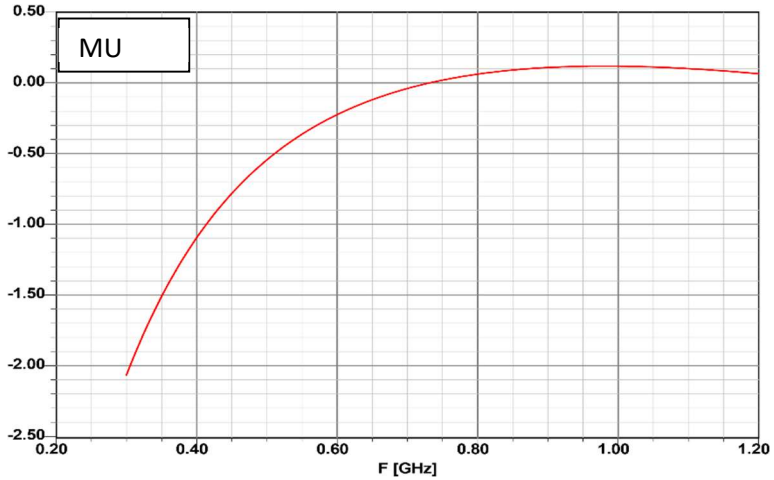

450 GHz stability circle

Blue- Output Circle
Red- Output Circle

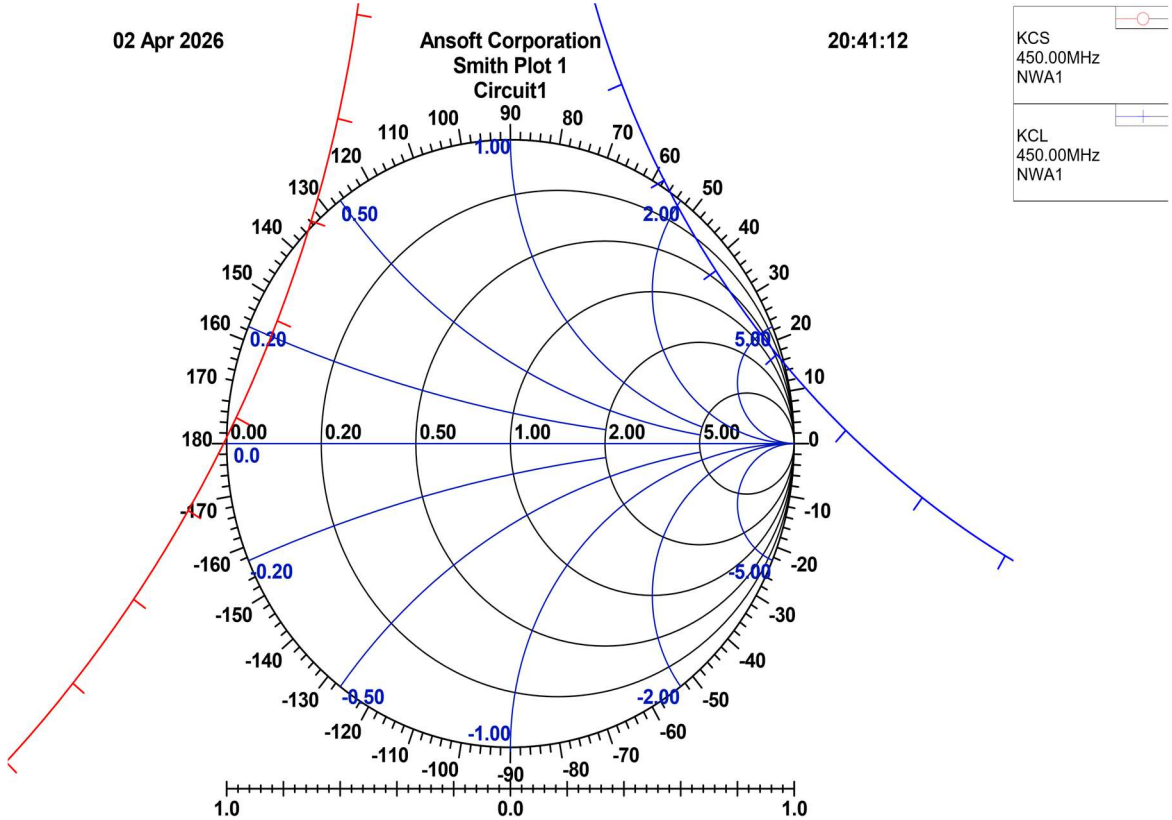

Serries Resistor before the output can fix the stability

Note: look for the blue circle at the chosen frequency where the circle is most parallel to the Z circle calculate from the resistance the resistance value

R_serries= Z*50

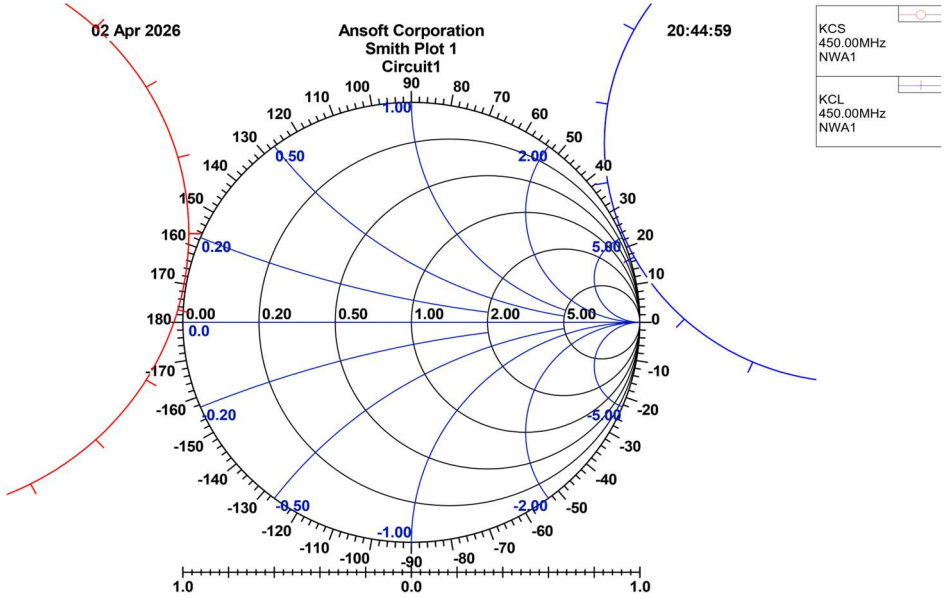

Parallel Resistor before the output can fix the stability

Note: look for the red circle at the chosen frequency where the circle is most parallel to the G circle calculate from the admittance the resistance value

R_parallel= 1/(Y/50)

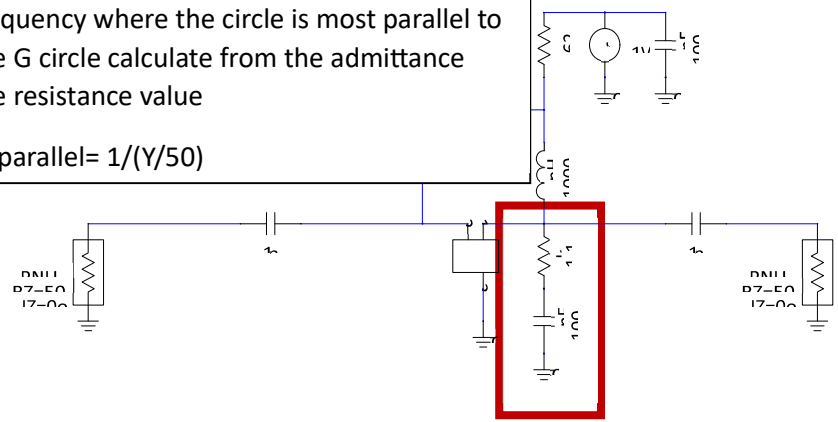

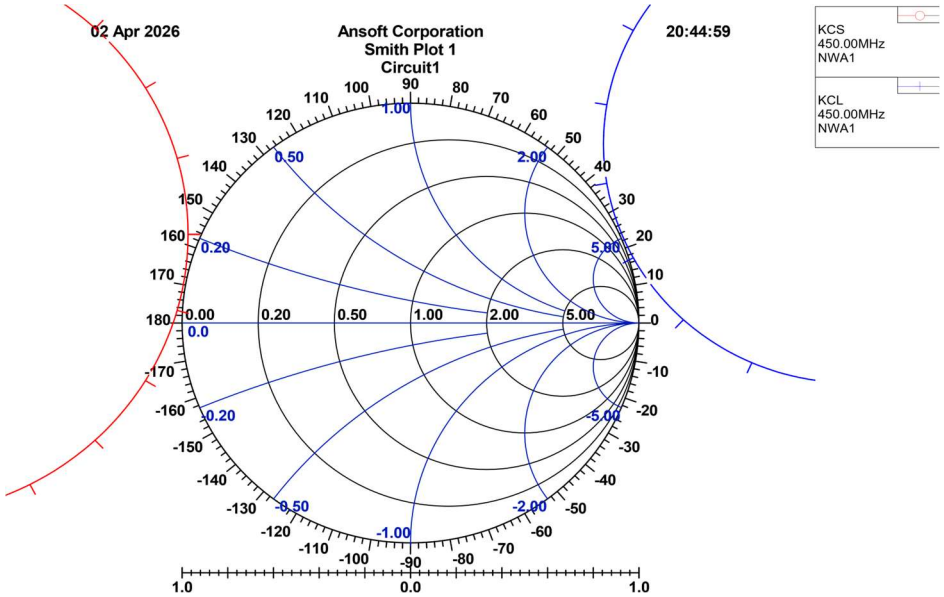

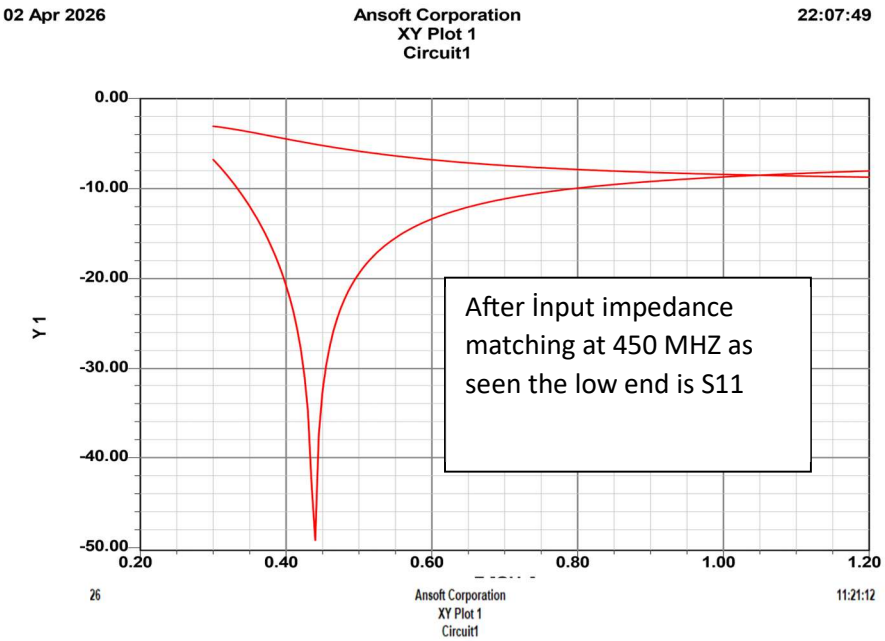

After İnput impedance matching at 450 MHZ as seen the low end is S11

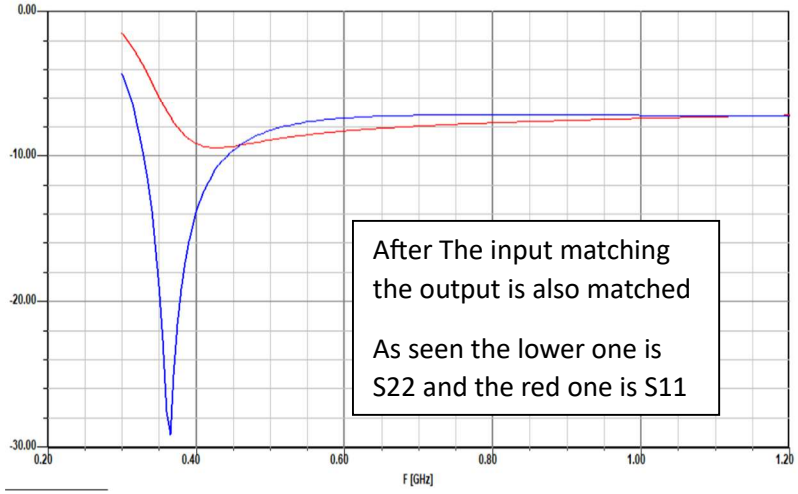

After The input matching the output is also matched

As seen the lower one is S22 and the red one is S11

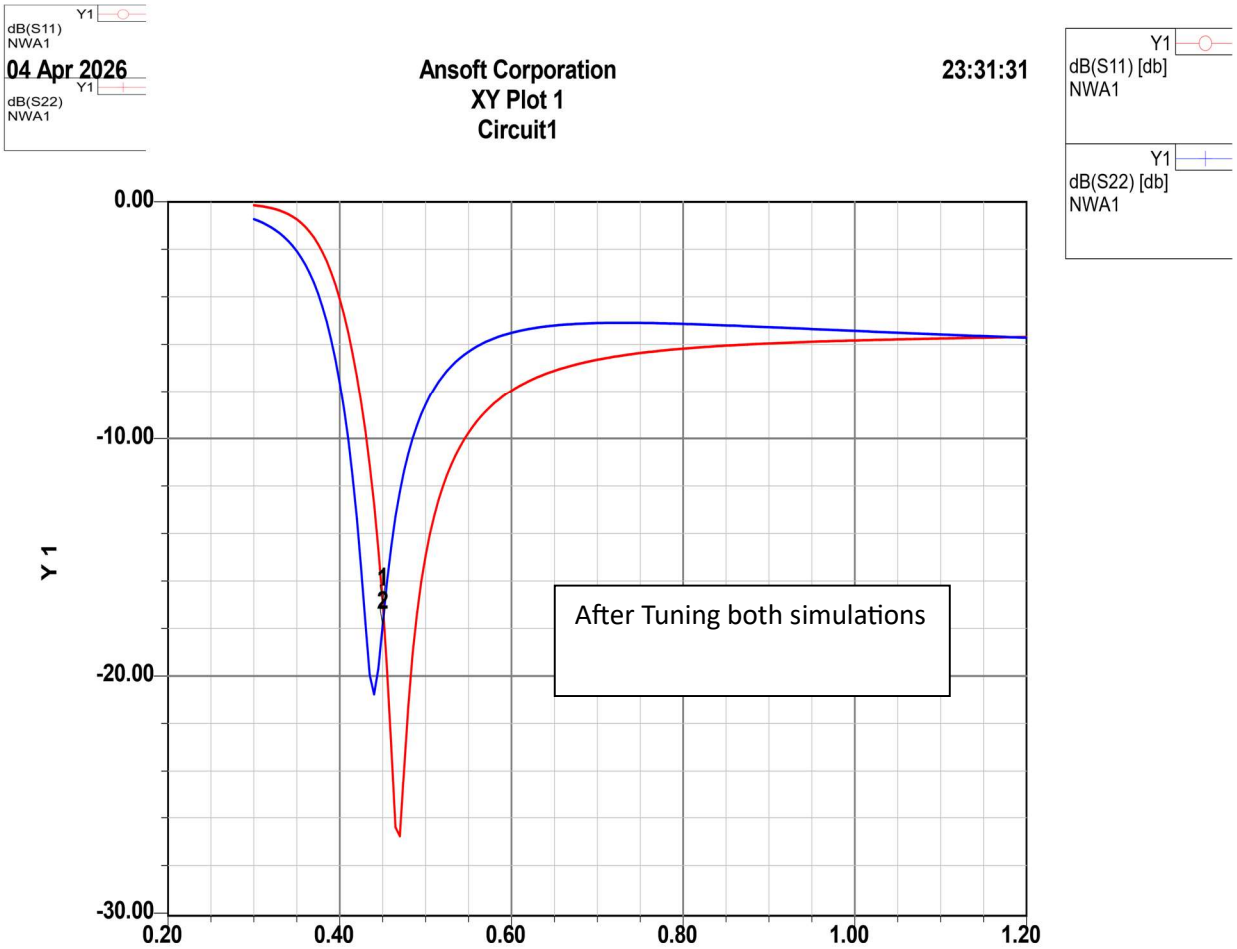

After Tuning both simulations

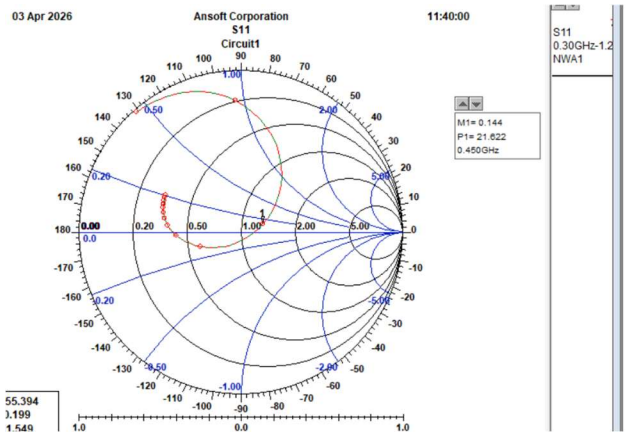

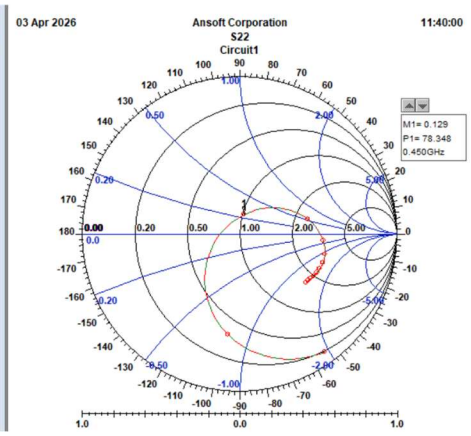

Note: When impedance matching the output port if you use the topology that uses a parallel inductor creating a short, so adding a series capacitor with a small value (1nF) between the inductor and ground can block the dc and making sure that the impedance matching is good.
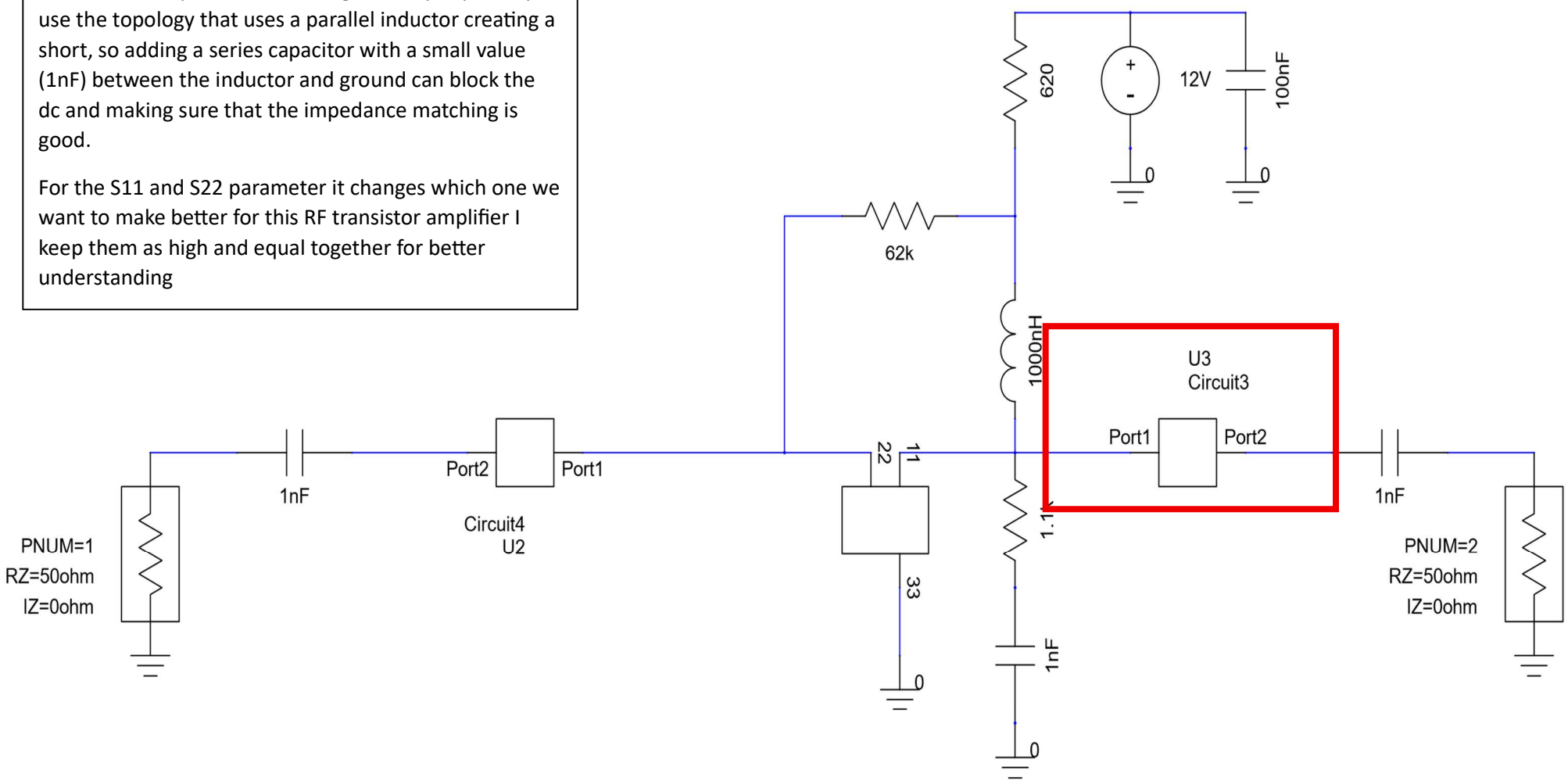
For the S11 and S22 parameter it changes which one we want to make better for this RF transistor amplifier I keep them as high and equal together for better understanding